Installation Instructions

BHSS Trim for ML2000 Series Mortise Locks

Corbin Russwin
ASSA ABLOY

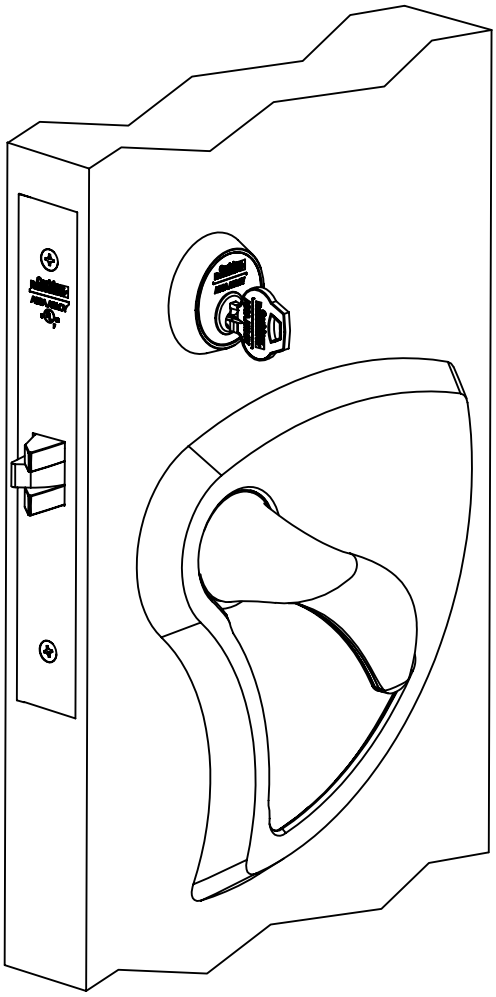

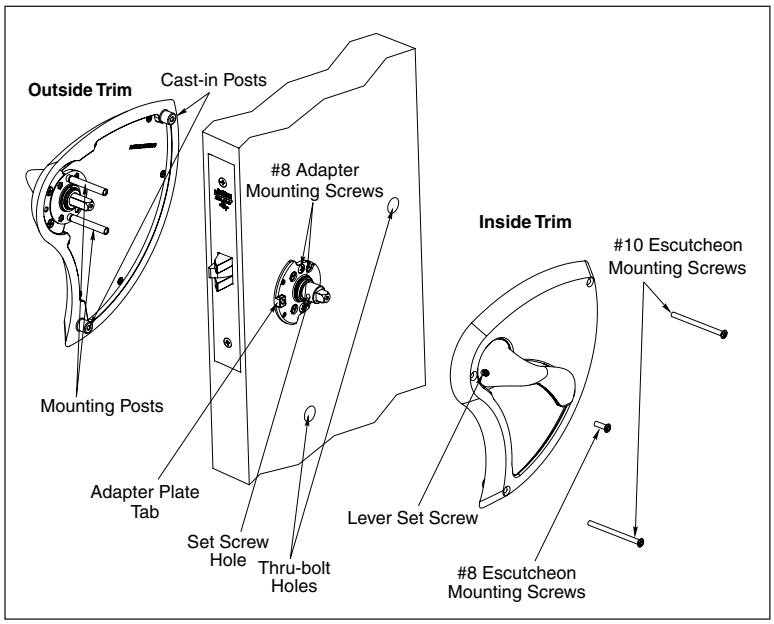

⚠ WARNING
This product can expose you to lead which is known to the state of California to cause cancer and birth defects or other reproductive harm. For more information go to www.P65warnings.ca.gov.

08/2018

TOC Table of Contents

1 Mortise Lock Handing Instructions 2

2 Mortise Lock Door Preparation & Installation 3

3 BHSS Trim Installation 5

4 Turn-Piece Installation 8

5 Coin-Turn Installation 8

QR Codes

To view the QR Code video clips within this document, download a free mobile app and scan the QR Code with your mobile device.
The complete video can be viewed on YouTube at https://youtu.be/I5MLFWODumo

For installation assistance contact Corbin Russwin
1-888-607-5703 • support@corbinrusswin.com

FM352 10/18

Copyright © 2017 Corbin Russwin, Inc., an ASSA ABLOY Group company.
All rights reserved. Reproduction in whole or in part without the express written permission of Corbin Russwin, Inc. is prohibited.

ASSA ABLOY, the global leader in door opening solutions

1 Mortise Lock Handing Instructions

1. Move the Red locking screw to side of lockbody being locked.
2. Push in latch then depress catch plate with screwdriver. (Figure 1)

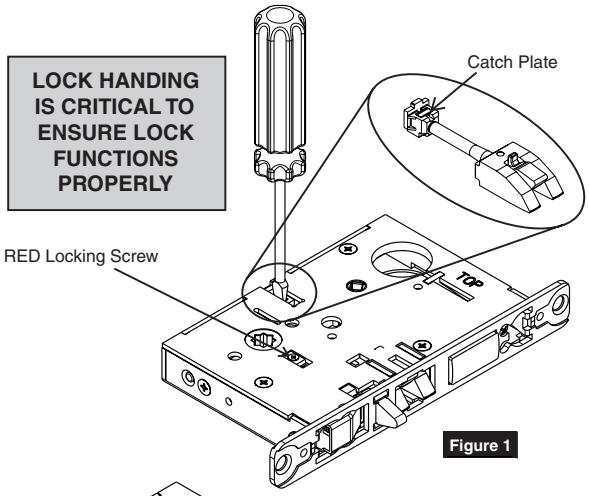

Figure 1

3. Pull latch out of lock-body and turn latch over. (Figure 2)

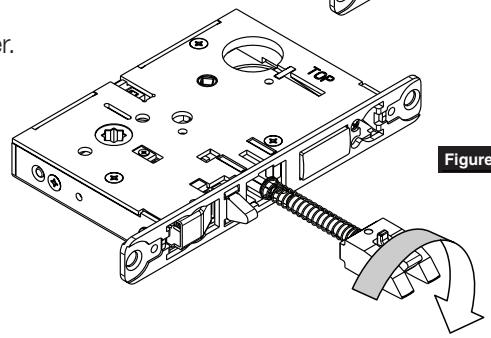

Figure 2

4. Push in latch while holding screwdriver behind latch tail. (Figure 3)

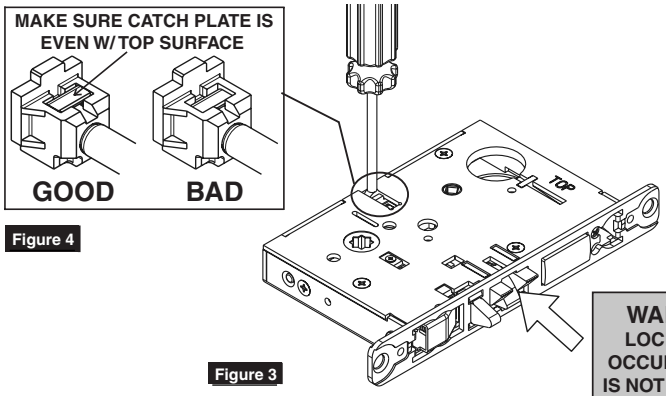

Figure 4

Figure 3

WARNING:
LOCK-IN CAN OCCUR IF LATCH IS NOT PROPERLY INSTALLED

NOTE:
PUSH IN LATCH UNTIL CATCH PLATE IS NO LONGER DEPRESSED. (FIGURE 4)

5. Rotate lock front to match bevel of door as shown. (Figure 5)

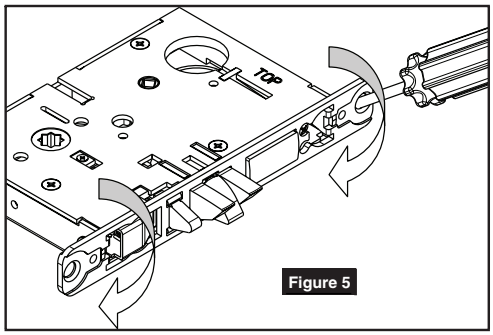

Figure 5

For installation assistance contact Corbin Russwin
1-888-607-5703 • support@corbinrusswin.com

FM352 10/18

Copyright © 2017 Corbin Russwin, Inc., an ASSA ABLOY Group company.
All rights reserved. Reproduction in whole or in part without the express written permission of Corbin Russwin, Inc. is prohibited.

ASSA ABLOY, the global leader in door opening solutions

2 Mortise Lock Door Preparation & Installation

Important: Be sure to hand the lockbody before installing. See page 4.

Lock-body Installation

1. Insert mortise lock into door and fully tighten 1" lock mounting combination screws. (Figure 6)
2. Insert spindle into outside lockbody hub.
3. Slide trim door marker template over spindle.

   NOTE:
   MAKE SURE TEMPLATE IS ORIENTED CORRECTLY. (FIGURE 7)

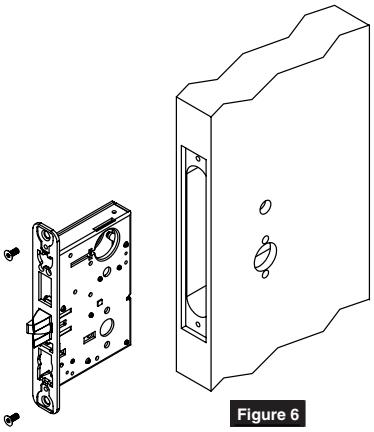

Figure 6

4. Square template to edge of door. (Figure 7)
5. Mark two thru-bolt holes.
6. Repeat steps 2-5 for inside of door.

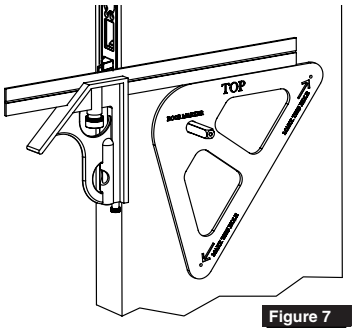

Figure 7

7. **TURN-PIECE FUNCTIONS ONLY:**
   Insert turn-piece door marker spindle into lockbody on inside of door.

   NOTE:
   USE SQUARE SIDE OF DOOR MARKER SPINDLE. (FIGURE 8)

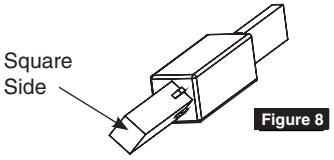

Figure 8

8. **TURN-PIECE FUNCTIONS ONLY:**
   Slide turn-piece door marker over spindle.
9. **TURN-PIECE FUNCTIONS ONLY:**
   Mark three holes for turn-piece. (Figure 9)

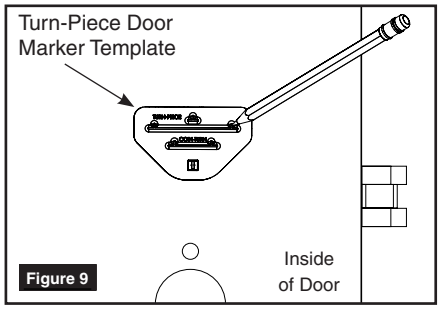

Figure 9

10. **COIN-TURN FUNCTIONS ONLY:**
    Insert turn-piece marker spindle into lockbody on outside of door.

    NOTE:
    USE SQUARE SIDE OF DOOR MARKER SPINDLE. (FIGURE 8)

11. **COIN-TURN FUNCTIONS ONLY:**
    Slide turn-piece door marker template over spindle.
12. **COIN-TURN FUNCTIONS ONLY:**
    Mark two holes for coin-turn. (Figure 10)

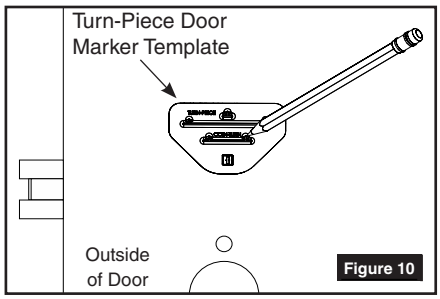

Figure 10

For installation assistance contact Corbin Russwin
1-888-607-5703 • support@corbinrusswin.com

FM352 10/18

Copyright © 2017 Corbin Russwin, Inc., an ASSA ABLOY Group company.
All rights reserved. Reproduction in whole or in part without the express written permission of Corbin Russwin, Inc. is prohibited.

ASSA ABLOY, the global leader in door opening solutions

2 Mortise Lock Door Preparation & Installation

13. Remove lockbody from door.
14. Drill two thru-bolt holes (9/16") halfway through one side of door.
15. Drill two thru-bolt holes (9/16") through from opposite side of door.

NOTE:

DRILL THROUGH BOTH SIDES OF DOOR FOR BETTER ACCURACY.

Drill Thrubolt Holes

16. **TURN-PIECE FUNCTIONS ONLY:** Drill one middle hole (.290") and two outer holes (3/8") halfway through door. (Figure 11)

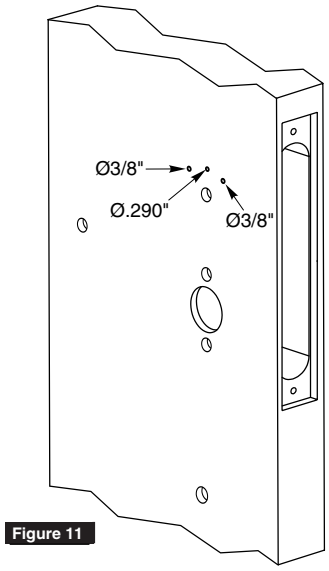

Figure 11

17. **COIN-TURN FUNCTIONS ONLY:** Drill two holes (1/8") halfway through door. (Figure 12)

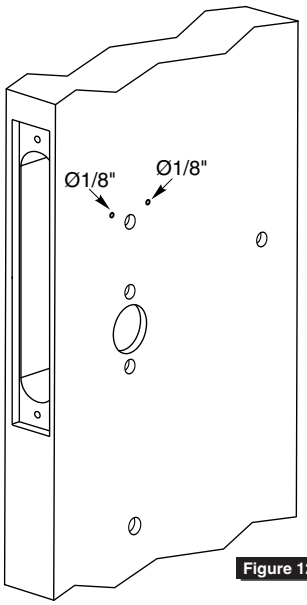

Figure 12

18. **TURN-PIECE FUNCTIONS ONLY:** Install turn-piece thru-bolt plate using truss head screw. (Leave screw slightly loose.) (Figure 13)

NOTE:

THE THRU-BOLT PLATE IS INSTALLED INSIDE THE DOOR POCKET.

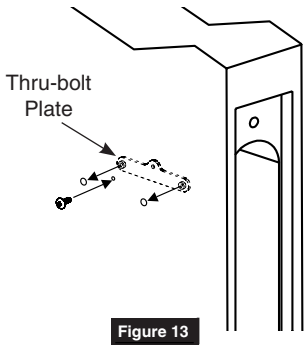

Figure 13

19. Insert mortise lockbody into door and loosely tighten 1" lock mounting combination screws.

NOTE:

MAKE SURE LOCK IS UNLOCKED. (FIGURE 14)

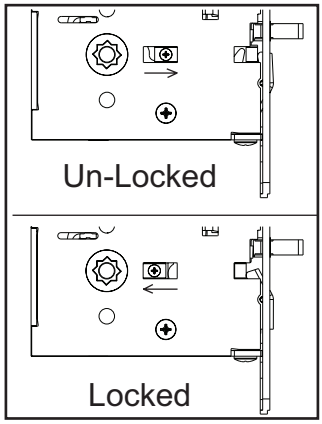

Figure 14

Copyright © 2017 Corbin Russwin, Inc., an ASSA ABLOY Group company.
All rights reserved. Reproduction in whole or in part without the express written permission of Corbin Russwin, Inc. is prohibited.

3 BHSS Trim Installation

BHSS Strike Installation

1. Install strike using 3/4" strike mounting screws.

NOTE:

STRIKE MUST BE ORIENTED WITH NARROWER HOLE ON LOWER HALF OF STRIKE AND STRIKE LIP TOWARDS PULL SIDE OF DOOR. (FIGURE 15)

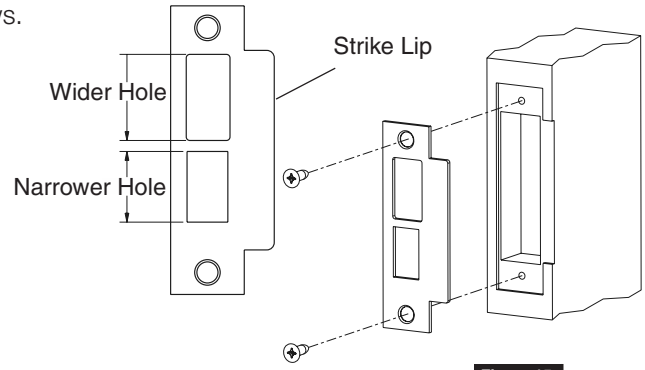

Figure 15

Cylinder Installation

2. **CYLINDER FUNCTIONS ONLY:**
Slide cylinder(s) through spring and collar, threading into lockbody until cylinder face is flush with collar. (Figure 16)

NOTE:

PULL KEY SLIGHTLY OUT OF CYLINDER TO HELP THREAD INTO LOCKBODY.

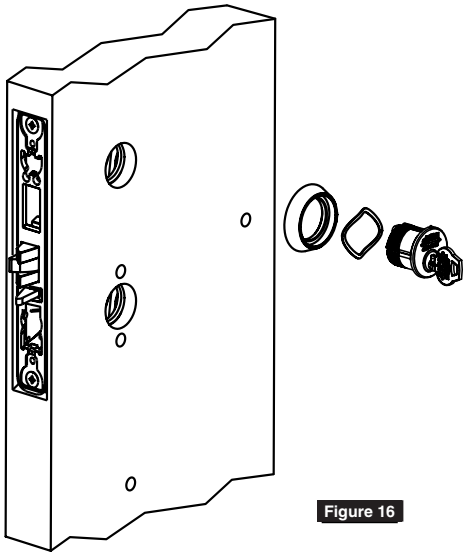

Figure 16

NOTE:

CYLINDER MUST BE ORIENTED CORRECTLY. (FIGURE 17)

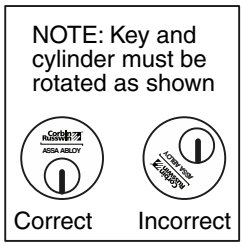

Figure 17

3. **CYLINDER FUNCTIONS ONLY:**
Install cylinder set screw(s). (Figure 18)

4. Fully tighten lock mounting screws.

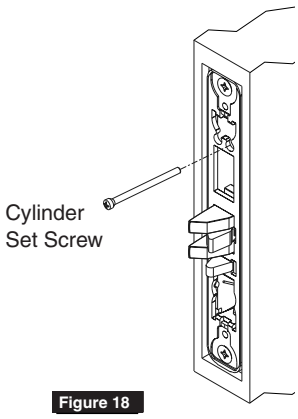

Figure 18

Copyright © 2017 Corbin Russwin, Inc., an ASSA ABLOY Group company.
All rights reserved. Reproduction in whole or in part without the express written permission of Corbin Russwin, Inc. is prohibited.

3 BHSS Trim Installation

Spindle & Outside Trim Assembly Installation

5. Thread adapter plate hub into lever and fully tighten. (Figure 19)

NOTE:
SPINDLE CAN BE USED TO HELP THREAD HUB INTO LEVER.

Outside Trim

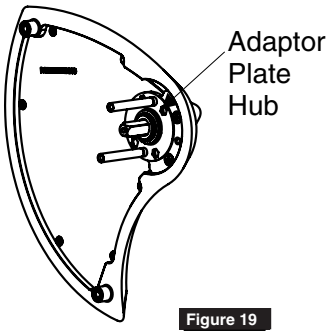

Figure 19

Adapter Plate Installation

6. Align adapter plate hub with square hole in lever; keeping hub as tight as possible. (Figure 20)

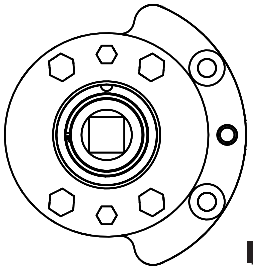

Figure 20

7. Insert spindle into outside trim assembly.

8. With lever in “up” position, align mounting posts on adapter plate with holes in lockbody and install outside trim assembly. (Figure 21)

NOTE:
AFTER OUTSIDE TRIM IS INSTALLED, ROTATE LEVER TO MAKE SURE SPINDLE IS ENGAGED IN LOCK.

Outside Trim

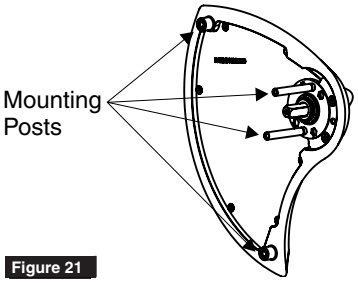

Figure 21

9. Insert spindle into lockbody on inside of door. (Figure 22)

Use Correct Spindle Orientation

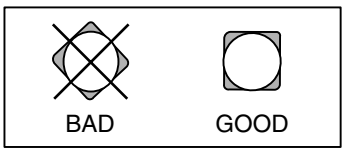

Figure 22

Copyright © 2017 Corbin Russwin, Inc., an ASSA ABLOY Group company.
All rights reserved. Reproduction in whole or in part without the express written permission of Corbin Russwin, Inc. is prohibited.

3 BHSS Trim Installation

Mount Escutcheon

10. Slide inside adapter plate over spindle and install using two adapter plate mounting screws. (Figure 23)

NOTE:

MAKE SURE ADAPTER PLATE TAB AND SET SCREW HOLE ARE FACING LOCK FRONT PRIOR TO INSTALLING SCREWS.

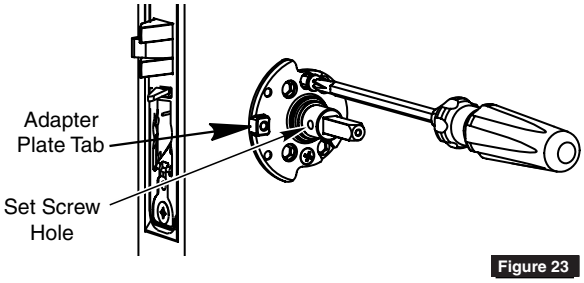

Figure 23

Inside Trim Assembly Installation

11. With lever in “up” position, install inside trim assembly.

NOTE:

AFTER TRIM IS INSTALLED, ROTATE LEVER TO MAKE SURE SPINDLE IS ENGAGED IN LOCK.

12. Tighten inside lever set screw. (Figure 24)

13. Install three escutcheon mounting screws through inside escutcheon. (Figure 24)

Inside Trim

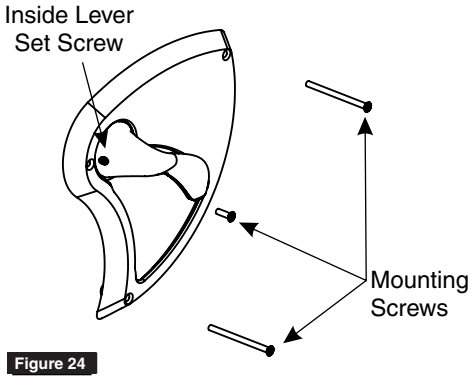

Figure 24

Lock Front Installation

14. Install lock front using two front screws. (Figure 25)

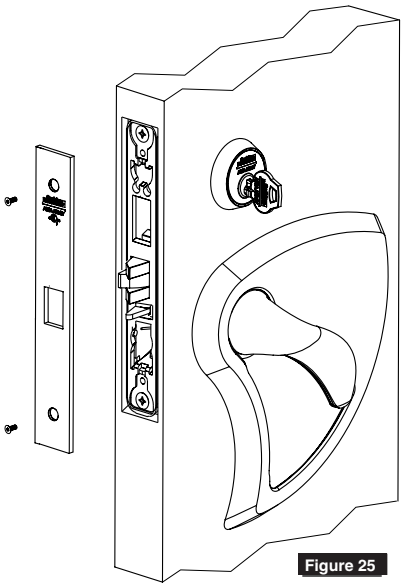

Figure 25

For installation assistance contact Corbin Russwin
1-888-607-5703 • support@corbinrusswin.com

FM352 10/18

Copyright © 2017 Corbin Russwin, Inc., an ASSA ABLOY Group company.
All rights reserved. Reproduction in whole or in part without the express written permission of Corbin Russwin, Inc. is prohibited.

ASSA ABLOY, the global leader in door opening solutions

4 Turn-Piece Installation

Turn-Piece Installation

1. Install turn-piece loosely using two turn-piece mounting screws. (Figure 26)

   NOTE:
   MAKE SURE LOCK IS UNLOCKED AND TURN-PIECE IS ROTATED TOWARDS LATCH. (FIGURE 27)

2. Adjust location of turn-piece on door until turn-piece rotates easily, then fully tighten mounting screws.

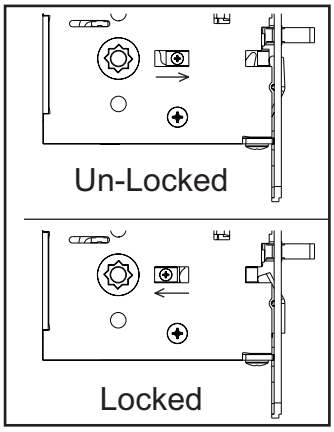

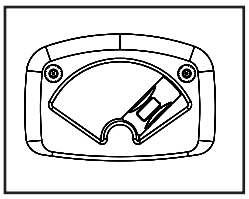

Figure 27

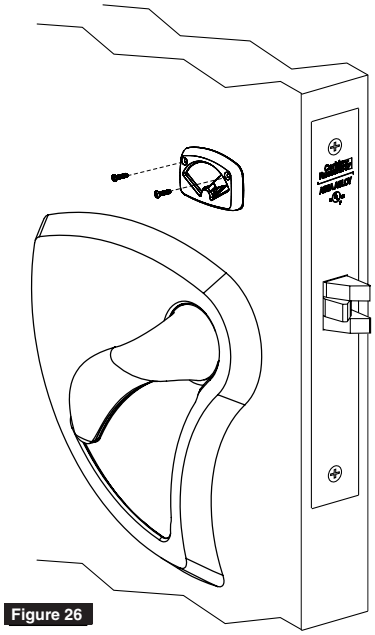

Figure 26

5 Coin-Turn Installation

1. Install coin-turn using two surface mount screws. (Figure 28)

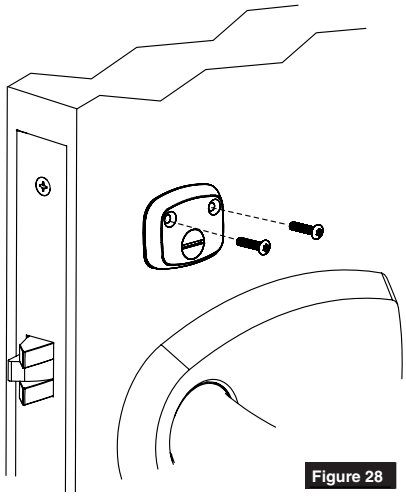

Figure 28

Corbin Russwin
225 Episcopal Road
Berlin, CT 06037
Phone: 800-543-3658
Fax: 800-447-6714
corbinrusswin.com

ASSA ABLOY is the global leader in door opening solutions, dedicated to satisfying end-user needs for security, safety and convenience

Copyright © 2017 Corbin Russwin, Inc., an ASSA ABLOY Group company. All rights reserved. Reproduction in whole or in part without the express written permission of Corbin Russwin, Inc. is prohibited.

Patent pending and/or patent: www.assaabloydss.com/patents

For installation assistance contact Corbin Russwin
1-888-607-5703 • support@corbinrusswin.com